INSTRUCTION PAMPHLET

U-5039

MAINTENANCE INSTRUCTIONS

FOR THE

STYLE "G" COLOR POSITION LIGHT SIGNAL

December, 1931

UNION SWITCH & SIGNAL CO.
SWISSVALE, PA.

Printed in U. S. A.

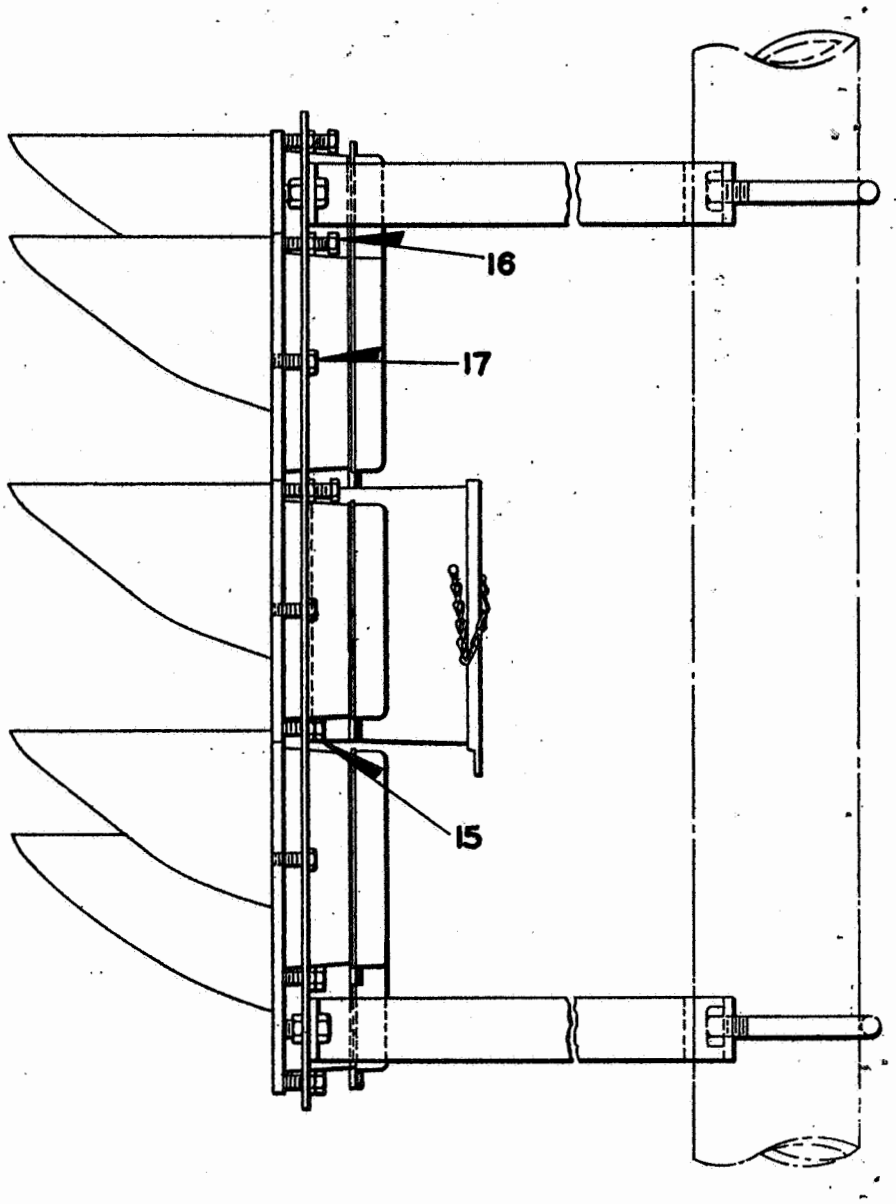

Fig. 1. Style "G" Color Position Light Signal mounted on pole and showing horizontal adjustment screws 17 and vertical adjustment screws 15 and 16.

INSTALLATION AND MAINTENANCE OF STYLE "G"

COLOR POSITION LIGHT SIGNALS

General

In the Style "G" Color Position Light Signal, the lens system, lamp receptacle, case, cover and hood assembly is referred to as a lamp unit. Figure 2 shows one of the lamp units. The lamp receptacle is accurately located with respect to the focal point of the lens system, so that when a precision type rebased lamp having a 2-7/32" light center length is placed in the receptacle, the filament will be located at the focal point of the lens system. Standard PS-16 type rebased lamps or S-11 type lamps with a suitable adapter (See Fig. 2) adjusted for 2-7/32" light center length may be employed in this lamp unit.

On the inside at the top of each unit is a socket for inserting the tapered shaft of a sighting device shown in Fig. 3. When the lamp receptacle and lens combination are assembled, they are carefully aligned so that the axis of the optical system is parallel to the axis of the tapered bore of the socket for the sighter. The sighting tube of the sighting device is parallel to the tapered shaft and, therefore, when placed in the socket, is parallel to the light beam from the lamp unit. This sighter may, therefore, be employed to indicate the point to which the light beam from the unit is pointed.

To provide against the contingency of the lamp unit cover being left off, thus making possible a phantom indication, an inner shield is provided which only opens sufficiently to allow the replacement of a lamp or the cleaning of the inner lens. This shield door automatically closes, and should not be fastened in the open position. This shield is provided with a covered opening

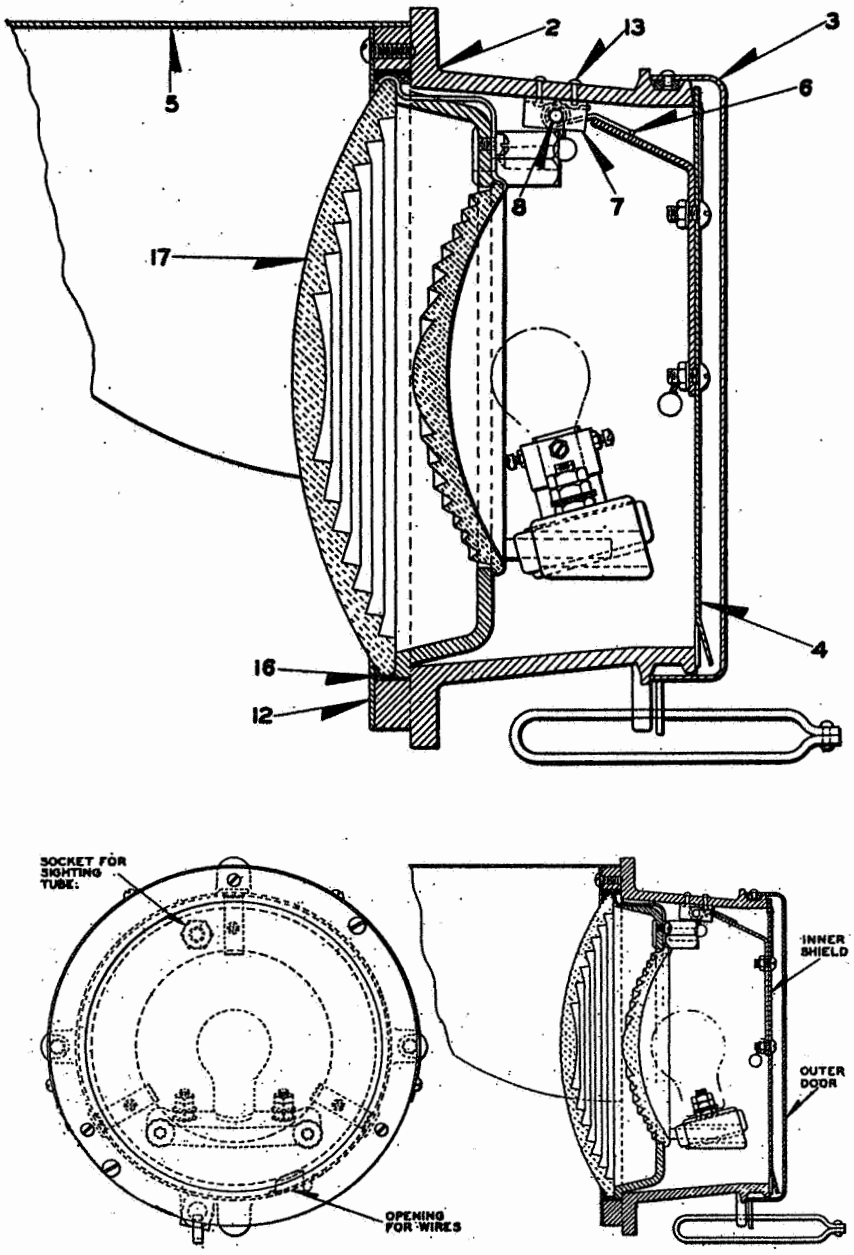

Fig. 2. Style "G" Lamp Unit.---Top view shows S-11 bulb with adjustable adapter Pc. 150085,---bottom view shows PS-16 precision type lamp.

directly back of the sighting tube socket to allow the use of the sighter without removing the shield.

The lamp units are adjustably mounted in a rigid boiler plate background. The background is supported on the mast with fixed brackets fastened to the mast with U-bolts as shown in Fig. 1. The complete signal assembly may be raised or lowered on the mast and rotated in the horizontal plane.

Alignment

When the signal is placed on the mast at the proper height it should be adjusted in the horizontal plane before fastening, so that the background is faced approximately in the correct direction. Each lamp unit is then aligned individually by means of the four adjustable mounting screws shown in Fig. 1, in a manner similar to the adjustment of a transit. Two screws, one located at each side of the unit, pass through clearance holes in the background and are threaded into the rim of the lamp unit. Two screws, one located at the top and one at the bottom of the lamp unit are threaded through the background and thus bear against the rim of the lamp unit.

To align each lamp unit, insert the shaft of the sighter in the sighter socket, sight through the tube, and adjust the position of the unit until the cross wires in the tube intersect the point on the track to which the signal is to be aligned. The alignment of the lamp unit is accomplished by means of

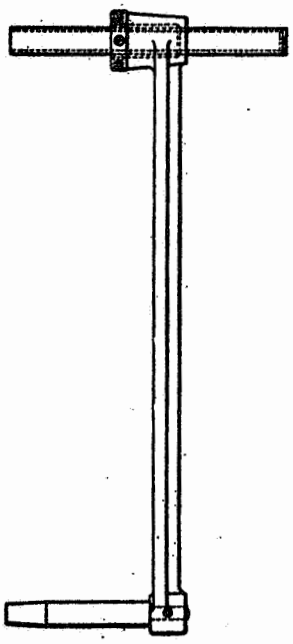

Fig.3. Sighting Tube Po. 167700 C-9003, Sh. 7.

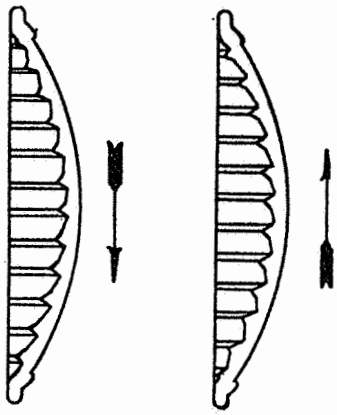

Fig. 4.....Sectional Views of Deflecting Prism Cover Glasses.

the four adjustable mounting screws as follows: - Back off the top screw and tighten the bottom screw to adjust the light beam upward and reverse this operation to adjust the beam downward. For horizontal adjustment, back off the left hand screw and tighten the right hand screw or vice versa. After the adjustment is completed, all four screws should be tight to prevent shifting of the lamp unit.

Alignment on Curves

Standard lamp units are designed to produce a rather concentrated light beam for long range indication on tangent track, or track of small curvature. Various special "deflecting prisms" can be furnished when additional spread of light beam is required to properly signal track of greater curvature. Two standard deflecting prism cover glasses are available for use on curved track, one for 10° spread in one direction only from the axis for moderately curved track; and the other one for 20° spread in one direction only from the axis for use where extreme spread is required. The deflecting prism cover glass together with its supporting ring is mounted in front of

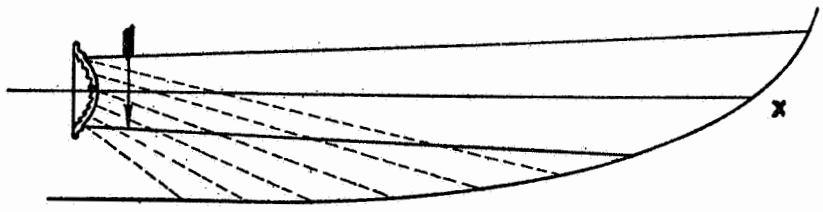

Fig.5. Diagram showing alignment of Light Signal on Curved Track.

the standard lens by means of two screws threaded into the standard lens ring in place of the dummy screws used to protect the tapped holes.

Figure 4 shows sectional views of a deflecting prism cover glass, the arrows indicating the direction a portion of the light beam is deflected in relation to the prismatic formation on the inside of the cover glass. It is obvious that the same cover glass can be used to deflect light in either direction by revolving it 180°. To align a signal on curved track, focus the sight on the farthest part of the curve, or on any other point where the indication should be first seen by the engineman. Figure 5 illustrates how the signal is aligned and the deflecting prism cover glass applied. The signal is aligned to point X; the main beam is indicated by the full lines. The cover glass is applied to deflect a portion of the beam in the direction of the arrow. The deflected light is indicated by the broken lines. After the signal has been aligned, the indication should be observed from the track to determine if the point of maximum range has been properly selected so as to utilize the full spread of the beam to the best advantage.

Cleaning of Lenses

Smoke and dust that collects on the exposed surface of lenses should be cleaned off at sufficiently frequent intervals to maintain the normal range of the signal.

Lamps with Adapters

When S-11 type lamps with adjustable adapters Pc. 150085, 12415 Sh. 14 are used, a jig is required for adjusting the adapter for accurate location of the lamp filament with respect to the base of the adapter, i.e., with the center of illuminated filament area in true axial alignment with the adapter base and 2-7/32" from the

top of the pins in the base. Such a jig Pc. 166866, C8919 Sh. 5 is available for this purpose. Instructions for adjusting adapters in this jig are covered in Instruction Pamphlet U-5040.

TRADE MARK

Rotaprinted IN U.S.A.